MODEL # 6410-SC SHEAR CUT KNIFE

BURRIS MACHINE COMPANY INC.
Phone: 828-322-6914 / Fax: 828-324-2793
Website:burrismachineco.com

Knife Holder Dimension Drawing

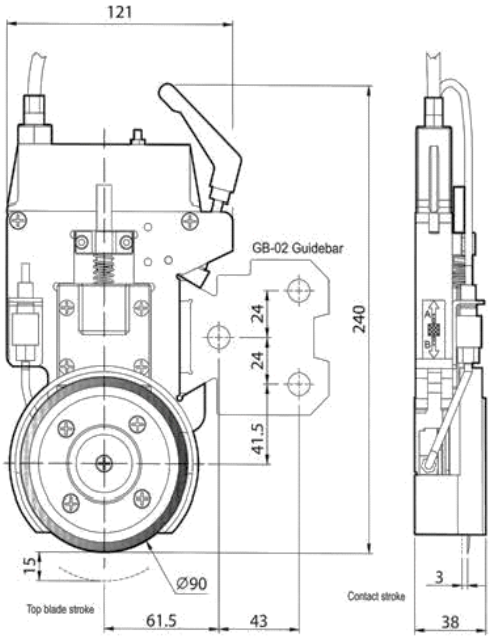

6410-SC – Shear Cut Knife

This knife is a lower cost option for a less demanding slitting environment. It is used in a wide range of applications, such as light paper, foil, metallic film and woven or non-woven fabrics at a cutting speed of up to 2,000 feet (400 meters) per minute.

The **6410-SC** shear cut knife's innovative design incorporates automatic stroke and side contact between the top and bottom knife to a pre-set, adjustable depth.

The spring-loaded clamp pawl allows for ease in mounting and positioning the knife holder. This knife-holder can be ordered for either left or right cut.

Dovetail Dimensions
6002-GB

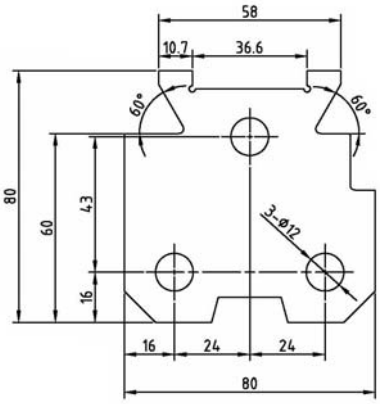

Overlap depth and side contact adjustment

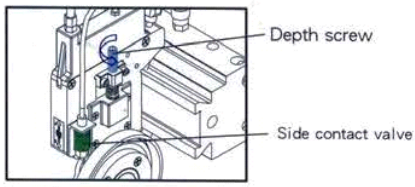

Contact angle adjustment

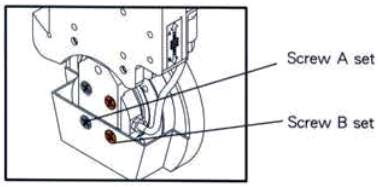

Blade Dimensions

Top blade

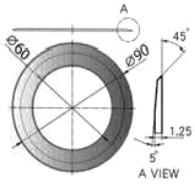

Bottom blade

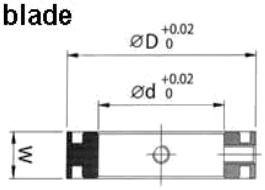

OD	ID	width
90	60	20
105	80	30

Main specification	
Min. slit width	40mm
Available stroke	15mm
Contact angle	1.5°
Max. slit speed	600M/min
Max. air pressure	6kg/cm^2
Blade material	SKH-9